Tri-State Media

Product Specification Sheet

sales@tri-statemedia.com

513-933-0101

Product: PMDT-25-1-R

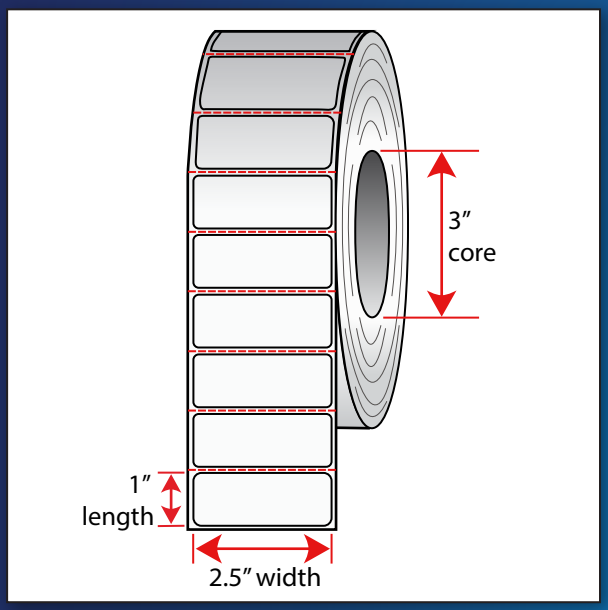

2.5” x 1” PolyMatte(DT) Label

SPECIFICATIONS:

MATERIAL:	Direct Thermal
FORMAT:	Roll
WIDTH:	2.5”
LENGTH:	1”
CORE SIZE:	3”
WOUND:	Out
PERFORATION:	Perforated
LABELS/ROLL:	3,000
LABELS/CARTON:	36,000
COLOR:	White
MORE COLOR OPTIONS?	Yes*

*Custom floodcoat/stripe color options are available upon request...Call/email to request